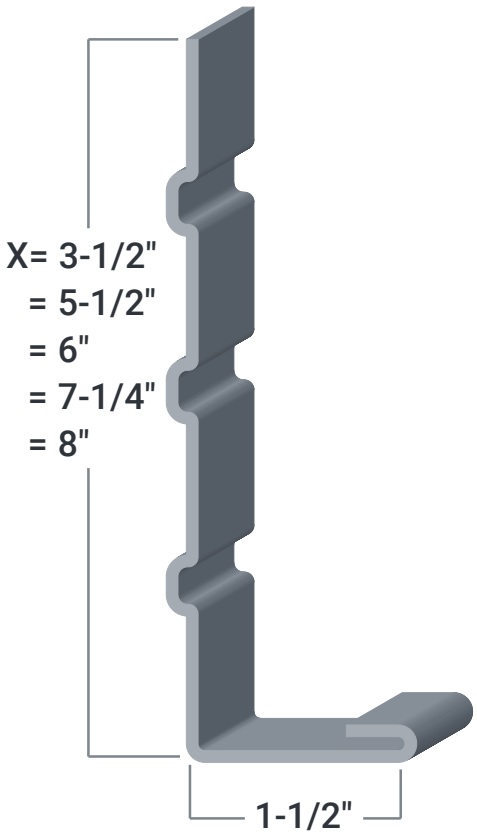
X= 3-1/2"
= 5-1/2"
= 6"
= 7-1/4"
= 8"
1-1/2"