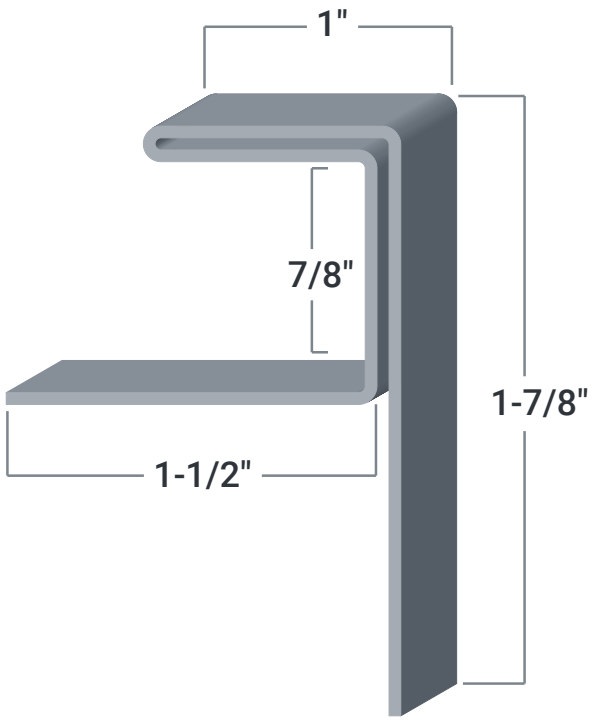
1"
7/8"
1-7/8"
1-1/2"