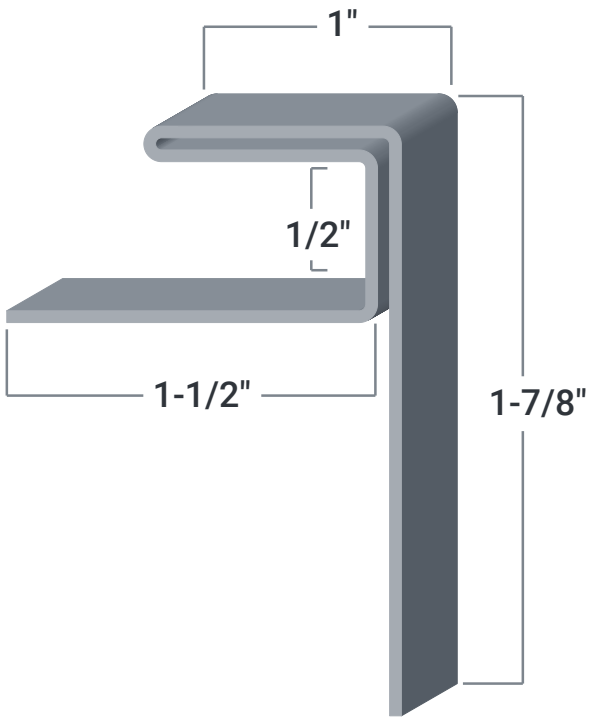
1"
1/2"
1-1/2"
1-7/8"