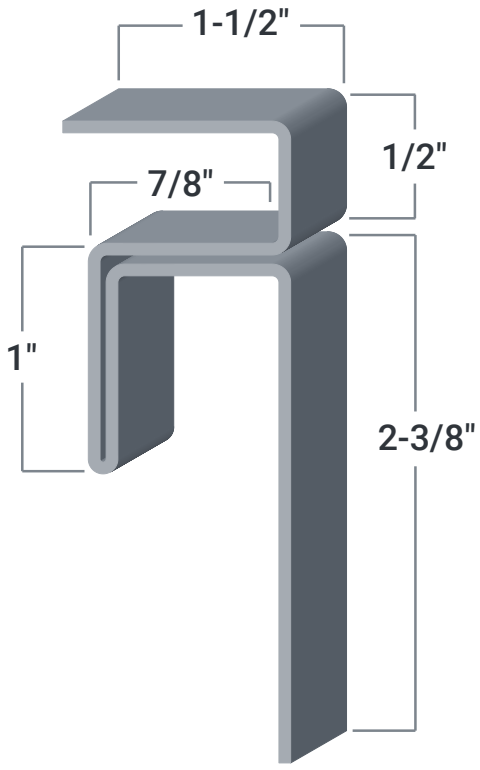
1-1/2"
1/2"
7/8"
1"
2-3/8"