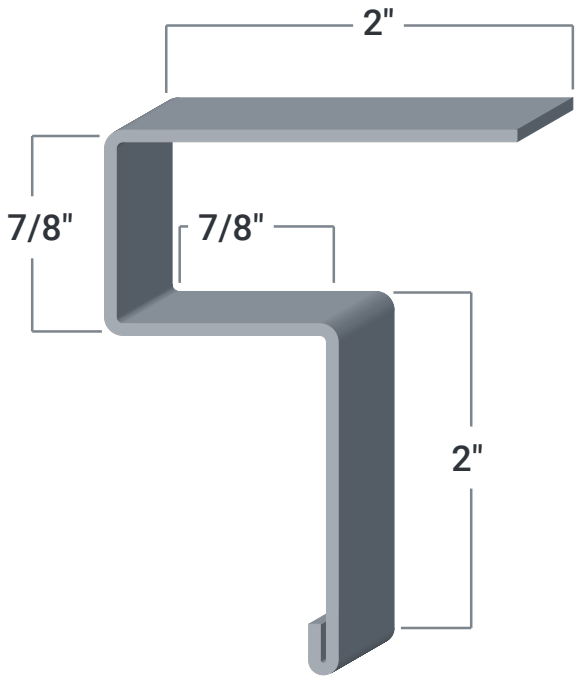
2"
7/8"
7/8"
2"