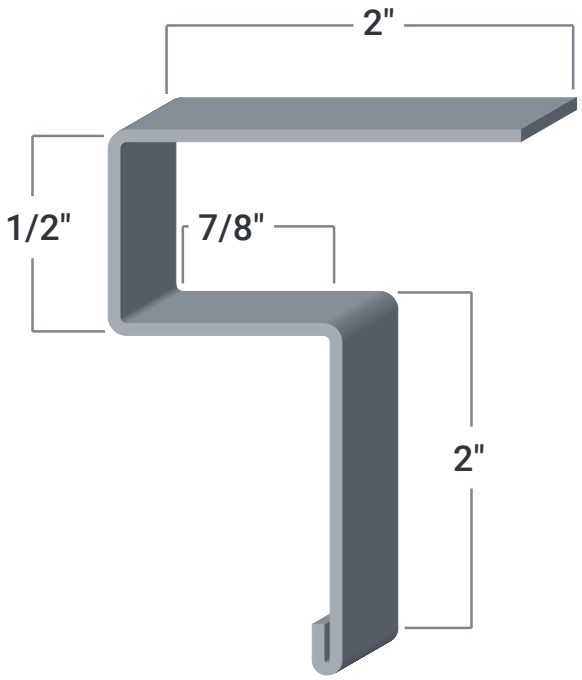
2"
1/2"
7/8"
2"