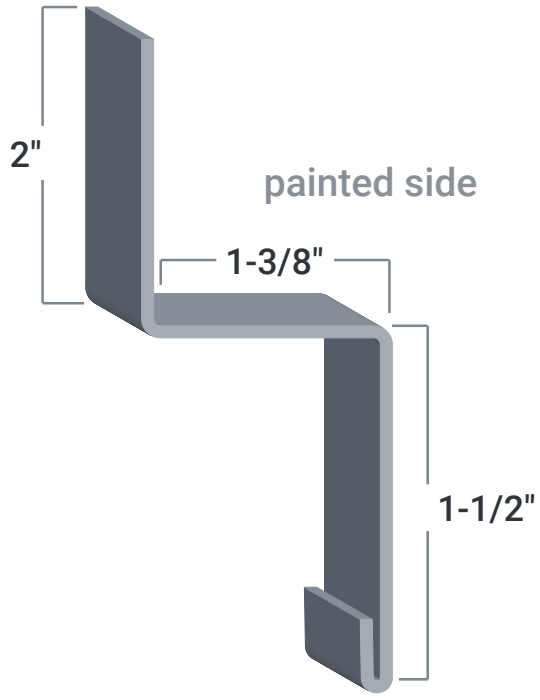
2"
painted side
1-3/8"
1-1/2"