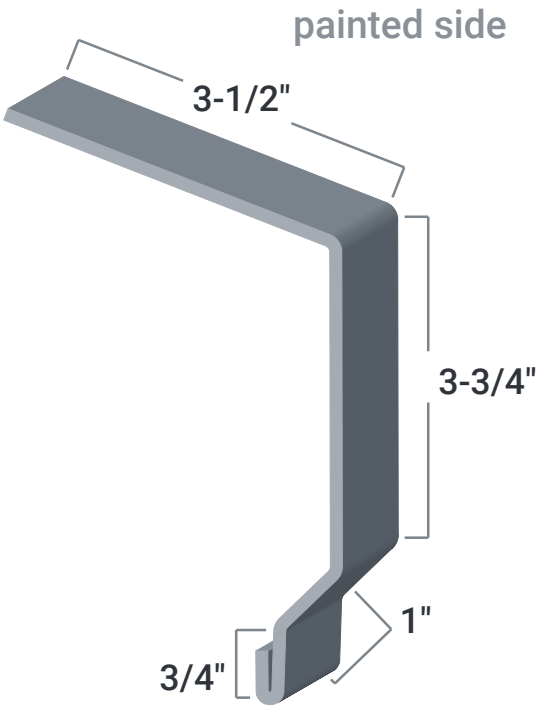
painted side
3-1/2"
3-3/4"
1"
3/4"