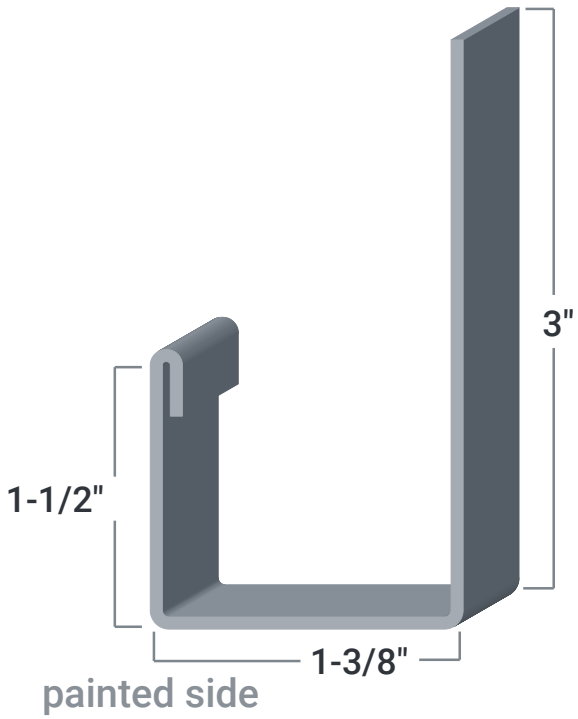
3"
1-1/2"
1-3/8"
painted side