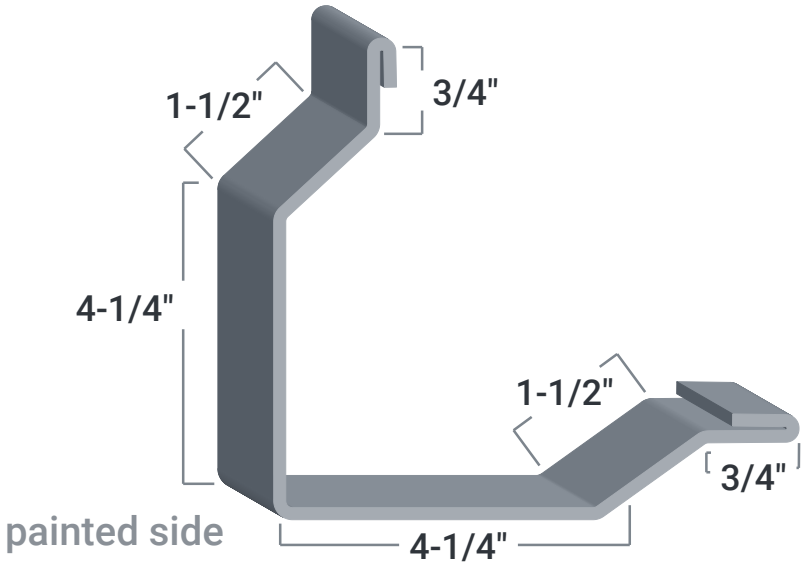
1-1/2"
3/4"
4-1/4"
1-1/2"
3/4"
painted side
4-1/4"