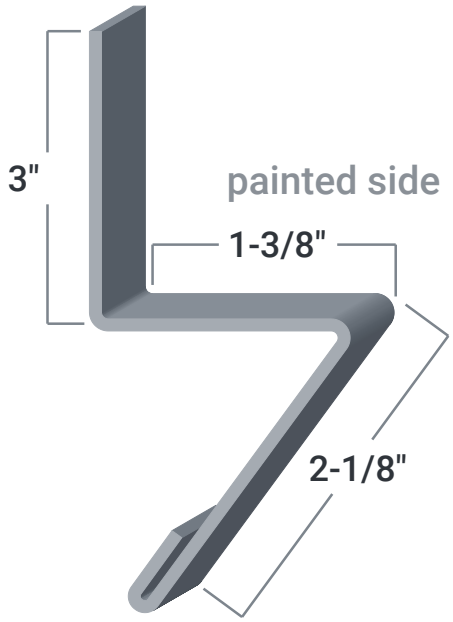
3"
painted side
1-3/8"
2-1/8"