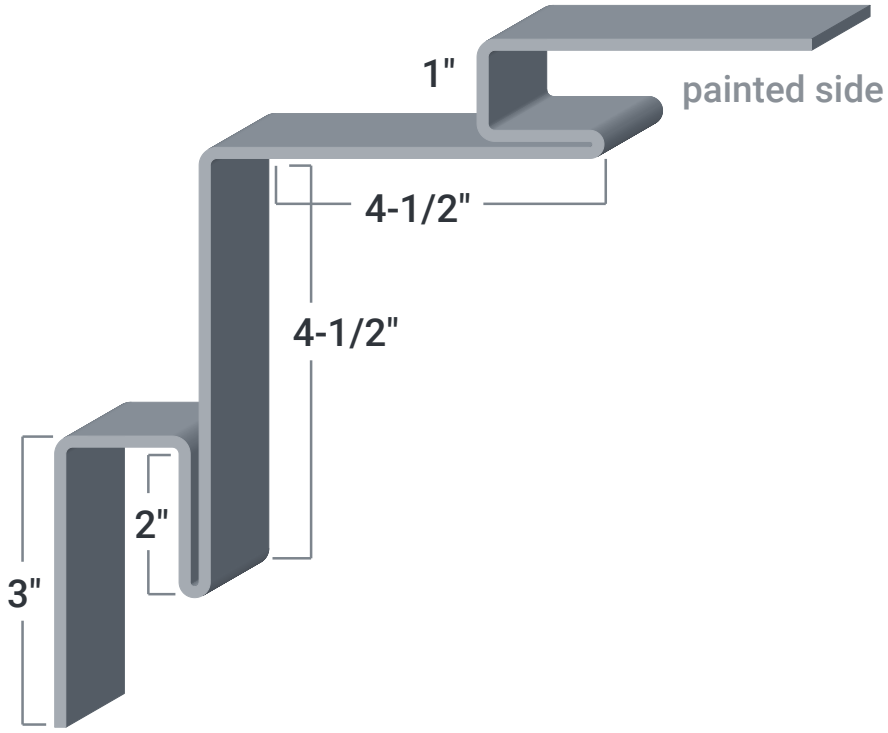
1"
painted side
4-1/2"
4-1/2"
2"
3"