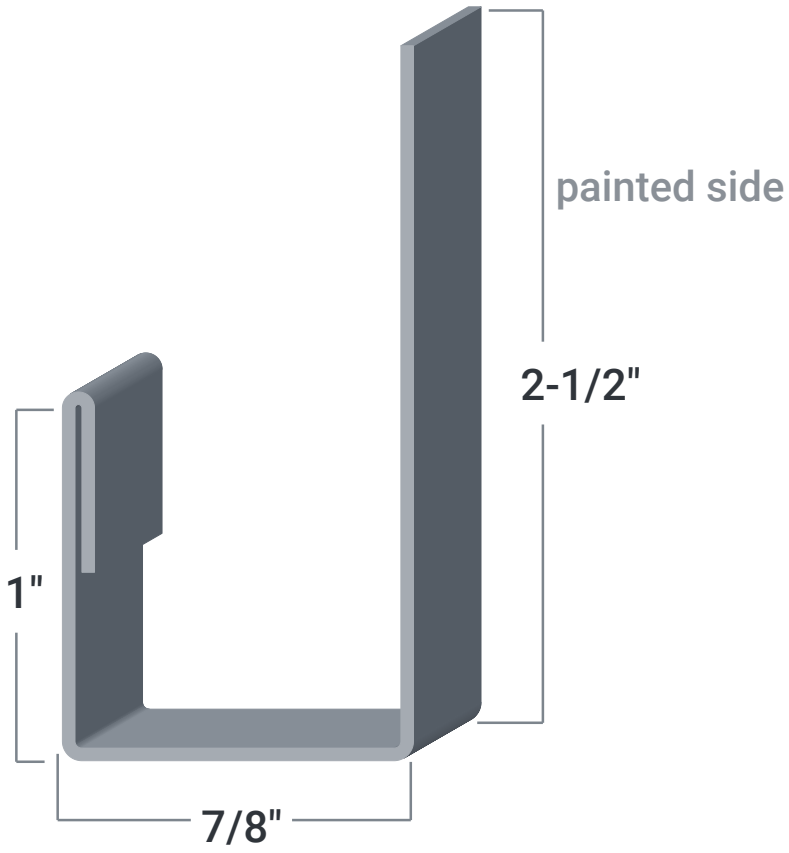
painted side
2-1/2"
1"
7/8"